Series KL

Technical information

Nominal bore [mm]	Cv value		Q [L/min] water 20 °C, Δp = 1 bar / 15 psi		Q [m³/h] air 6 bar abs / 87 psia, 20 °C, Δp = 1 bar / 15 psi		p max. permissible static [bar / psi]
	EA	BA	EA	BA	EA	BA	PA resp. POM coupled
6	1.00	0.73	14.28	10.43	50.61	36.94	12 / 174
12	3.10	2.32	44.27	33.13	156.88	117.41	10 / 145
30	30.46	23.30	435.00	332.75	1,541.48	1,179.14	10 / 145

One side self-sealing (EA). Both sides self-sealing (BA). The pressure values are applicable at a temperature of 20°C. Please inquire about other temperature ranges.

The maximum permissible operating pressures specified here (p max. permissible static) for the quick coupling systems apply exclusively to the materials stated by us and operation with Group II media according to Directive 2014/68/EU. The use of optional materials, other media (especially media from Group I) or other temperature ranges can lead to deviating maximum permissible operating pressures and must be requested separately at your supplier or directly at WALTHER-PRÄZISION.

Please note that both the maximum permissible operating pressure of the quick coupling system and the maximum permissible operating pressure of the connection must be considered in determining the plant operating pressure. Our safety instructions must be followed. You can find the safety instructions on page 22 of this catalogue.

If you have additional questions or need further information, please consult either your supplier or WALTHER-PRÄZISION directly.

◂◂◂ To view the performance diagram please click here.

To view the connection description ▸▸▸ please click here.

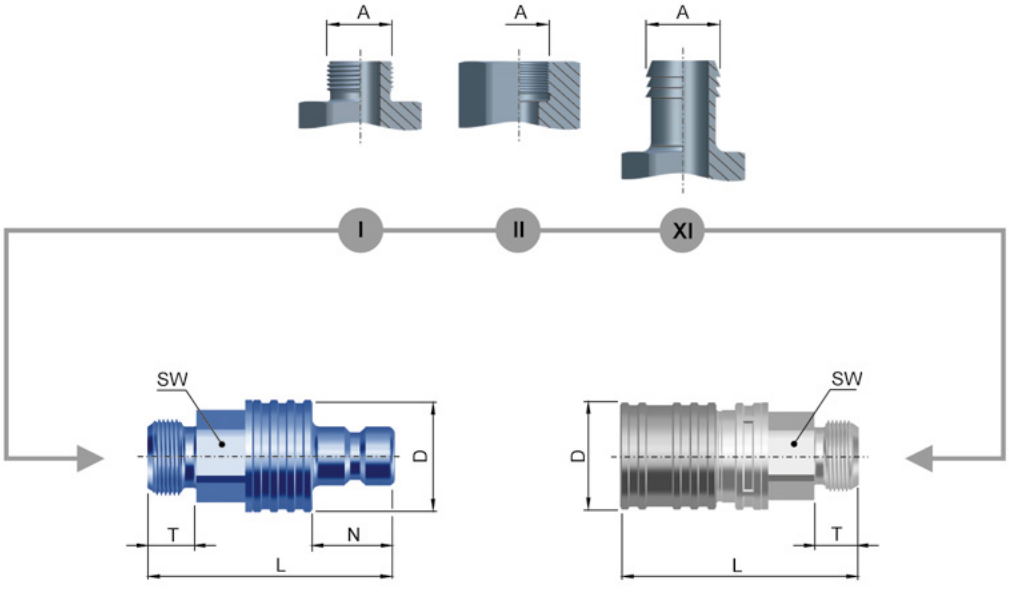

Self-sealing adaptor (male)

Self-sealing coupling (female)

Product design features

Intended use: Low pressure quick coupling system made of plastic for a wide range of applications, for the transmission of fluid or gaseous media in an industrial / commercial environment.

Properties	Materials	Seals	Additional options
Ideal for battery watering systems **KL-006** - Can be coupled with LP-006 **KL-012** - Can be coupled with LP-012	Balls and springs made of stainless steel **KL-006** 50 = polyamide, grey **KL-012** 40 = polyacetal resin, grey Springs optional Hastelloy C **KL-030** 40 = polyacetal resin, grey 46 = polyacetal, black **Optional** Other material versions as special types, e.g. PP or PVDF	1 = NBR 2 = FKM 4 = EPDM **Optional** FFKM	0V = Without valve **KL-006** SI = Additional axial safety locking device (outside diameter of 29 mm) **KL-012** SI = Additional axial safety locking device (outside diameter of 44 mm) Note: SI locking rings made of POM (black)

KL-006: Z14: Self-sealing coupling and adaptor from polypropylene material (PP) anthracite (p max. allowed 3 bar up to 20°C).
KL-012: Z01: Coupling with O-ring sealing (also for slight negative pressure).

Note: Some connecting adaptors made of POM can be found in the section Accessories under Connection and reducing adaptors.

Caution: Self-sealing coupling + OV ≙ Product type Thru-type coupling; Self-sealing adaptor + OV ≙ Product type Thru-type adaptor

Order number configuration

KL-006-0-SL007-Material-Seal-Additional options-Y../-Z..

Product chart

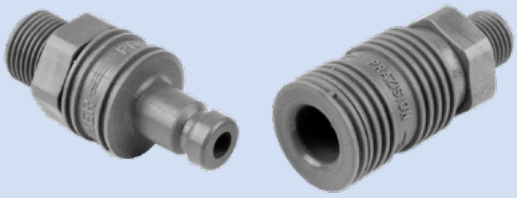

NB	Product type	A	De-sign	Pipe ID	SW	T	D	L	N	Weight PA	Material-neutral part number
6	Self-sealing coupling (female)	7 mm	XI	4	22	25	24	68.3		16	KL-006-0-SL007-..-.
6	Self-sealing coupling (female)	9 mm	XI		22	30	24	73.3		17	KL-006-0-SL009-..-.
6	Self-sealing coupling (female)	11 mm	XI		22	30	24	73.3		18	KL-006-0-SL011-..-.
6	Self-sealing coupling (female)	13 mm	XI		22	30	24	73.3		19	KL-006-0-SL013-..-.

NB - Nominal bore [mm] **A** - Connection **SW** - Wrench size [mm] **T** - Thread length [mm] **D** - Diameter [mm] **L** - Length [mm] **N** - Adaptor length [mm] Weight [g]

Series KL

Product chart

NB	Product type	A	De-sign	Pipe ID	SW	T	D	L	N	Weight PA	Material-neutral part number
6	Self-sealing coupling (female)	BSPP 1/4"	I		22	12	24	55.3		16	KL-006-0-WR013-..-.
6	Self-sealing coupling (female)	BSPP 3/8"	I		22	12	24	55.3		17	KL-006-0-WR017-..-.
6	Self-sealing coupling (female)	BSPP 1/2"	I		22	12	24	55.3		18	KL-006-0-WR021-..-.
6	Self-sealing coupling (female)	BSPP 1/4"	II		22	14	24	57.3		19	KL-006-0-WR513-..-.
6	Self-sealing coupling (female)	BSPP 3/8"	II		22	14	24	57.3		18	KL-006-0-WR517-..-.
6	Thru-type adaptor (male)	7 mm	XI	3		25	12	46	20	3	KL-006-1-SL007-..
6	Thru-type adaptor (male)	9 mm	XI			30	12	51	20	3	KL-006-1-SL009-..
6	Thru-type adaptor (male)	11 mm	XI			30	16	53	20	4	KL-006-1-SL011-..
6	Thru-type adaptor (male)	13 mm	XI			30	16	53	20	5	KL-006-1-SL013-..
6	Thru-type adaptor (male)	BSPP 1/8"	I	4	15	7	16	32	20	3	KL-006-1-WR010-..
6	Thru-type adaptor (male)	BSPP 1/4"	I		19	9	20.5	35	20	4	KL-006-1-WR013-..
6	Thru-type adaptor (male)	BSPP 3/8"	I		22	11	24	38	20	6	KL-006-1-WR017-..
6	Thru-type adaptor (male)	BSPP 1/8"	II		17	13.5	18.5	36	20	4	KL-006-1-WR510-..
6	Thru-type adaptor (male)	BSPP 1/4"	II		17	13.5	18.5	36	20	4	KL-006-1-WR513-..
6	Self-sealing adaptor (male)	7 mm	XI	4	22	25	24	66.5	20	10	KL-006-2-SL007-..-.
6	Self-sealing adaptor (male)	9 mm	XI		22	30	24	71.5	20	10	KL-006-2-SL009-..-.
6	Self-sealing adaptor (male)	11 mm	XI		22	30	24	71.5	20	11	KL-006-2-SL011-..-.
6	Self-sealing adaptor (male)	13 mm	XI		22	30	24	71.5	20	12	KL-006-2-SL013-..-.
6	Self-sealing adaptor (male)	BSPP 1/4"	I		22	12	24	53.5	20	10	KL-006-2-WR013-..-.
6	Self-sealing adaptor (male)	BSPP 3/8"	I		22	12	24	53.5	20	10	KL-006-2-WR017-..-.
6	Self-sealing adaptor (male)	BSPP 1/2"	I		22	12	24	53.3	20	11	KL-006-2-WR021-..-.
6	Self-sealing adaptor (male)	BSPP 1/4"	II		22	14	24	55.5	20	13	KL-006-2-WR513-..-.
6	Self-sealing adaptor (male)	BSPP 3/8"	II		22	14	24	55.5	20	12	KL-006-2-WR517-..-.

NB - Nominal bore [mm] **A** - Connection **SW** - Wrench size [mm] **T** - Thread length [mm] **D** - Diameter [mm] **L** - Length [mm] **N** - Adaptor length [mm] Weight [g]

Product chart

NB	Product type	A	De-sign	Pipe ID	SW	T	D	L	N	Weight POM	Material-neutral part number
12	Self-sealing coupling (female)	16 mm	XI		30	35	40	98		90	KL-012-0-SL016-..-.
12	Self-sealing coupling (female)	19 mm	XI		30	35	40	102		90	KL-012-0-SL019-..-.
12	Self-sealing coupling (female)	BSPP 1/2"	I		30	15	40	88		90	KL-012-0-WR021-..-.
12	Self-sealing coupling (female)	BSPP 3/4"	I		30	17	40	90		90	KL-012-0-WR026-..-.
12	Self-sealing coupling (female)	BSPP 1/2"	II		30	15	40	82.5		85	KL-012-0-WR521-..-.
12	Self-sealing coupling (female)	BSPP 3/4"	II		30	17	40	84.5		90	KL-012-0-WR526-..-.
12	Thru-type adaptor (male)	13 mm	XI	8		30	21	59.5	29.5	13	KL-012-1-SL013-..
12	Thru-type adaptor (male)	16 mm	XI			35	21	64.5	29.5	14	KL-012-1-SL016-..
12	Thru-type adaptor (male)	19 mm	XI			35	25	68.5	29.5	19	KL-012-1-SL019-..
12	Thru-type adaptor (male)	BSPP 1/2"	I		30	15	33.1	54.5	29.5	21	KL-012-1-WR021-..
12	Thru-type adaptor (male)	BSPP 3/4"	I		30	17	33.1	56.5	29.5	25	KL-012-1-WR026-..
12	Thru-type adaptor (male)	BSPP 1/2"	II		30	15	33.1	49	29.5	19	KL-012-1-WR521-..
12	Thru-type adaptor (male)	BSPP 3/4"	II		30	17	33.1	51	29.5	20	KL-012-1-WR526-..
12	Self-sealing adaptor (male)	16 mm	XI		30	35	40	96	29.5	58	KL-012-2-SL016-..-.
12	Self-sealing adaptor (male)	19 mm	XI		30	35	40	100	29.5	62	KL-012-2-SL019-..-.
12	Self-sealing adaptor (male)	BSPP 1/2"	I		30	15	40	86	29.5	60	KL-012-2-WR021-..-.
12	Self-sealing adaptor (male)	BSPP 3/4"	I		30	17	40	88	29.5	60	KL-012-2-WR026-..-.
12	Self-sealing adaptor (male)	BSPP 1/2"	II		30	15	40	82.5	29.5	55	KL-012-2-WR521-..-.
12	Self-sealing adaptor (male)	BSPP 3/4"	II		30	17	40	82.5	29.5	60	KL-012-2-WR526-..-.
30	Self-sealing coupling (female)	BSPP 1 1/2"	II		60	23.5	70	114		330	KL-030-0-WR548-..-.
30	Self-sealing coupling (female)	BSPP 2"	II		60	26	70	116		320	KL-030-0-WR560-..-.

NB - Nominal bore [mm] **A** - Connection **SW** - Wrench size [mm] **T** - Thread length [mm] **D** - Diameter [mm] **L** - Length [mm] **N** - Adaptor length [mm] Weight [g]

Series KL

Product chart

NB	Product type	A	De-sign	Pipe ID	SW	T	D	L	N	Weight POM	Material-neutral part number
30	Thru-type adaptor (male)	BSPP 1 1/2"	II		60	25	66	66	35	95	KL-030-1-WR548-..
30	Self-sealing adaptor (male)	BSPP 1 1/2"	II		60	23.5	66	114	35	230	KL-030-2-WR548-..-.
30	Self-sealing adaptor (male)	BSPP 2"	II		60	26	66	116	35	220	KL-030-2-WR560-..-.
30	Thru-type coupling (female)	BSPP 1 1/2"	II			18	70	84		240	KL-030-4-WR548-..-.

NB - Nominal bore [mm] **A** - Connection **SW** - Wrench size [mm] **T** - Thread length [mm] **D** - Diameter [mm] **L** - Length [mm] **N** - Adaptor length [mm] Weight [g]