# Series HC

## Technical information

| Nominal bore [mm] | Cv value | | Q [L/min] water 20 °C, Δp = 1 bar / 15 psi | | Q [m³/h] air 6 bar abs / 87 psia, 20 °C, Δp = 1 bar / 15 psi | | p max. permissible static [bar / psi] |
|---|---|---|---|---|---|---|---|
| | EA | BA | EA | BA | EA | BA | Steel coupled |
| 6 | | 0.61 | | 8.71 | | 30.87 | 650 / 9,430 |
| 8 | | 1.47 | | 20.99 | | 74.39 | 600 / 8,700 |
| 12 | | 2.93 | | 41.85 | | 148.28 | 600 / 8,700 |
| 16 | | 5.03 | | 71.84 | | 254.55 | 600 / 8,700 |
| 20 | | 7.37 | | 105.26 | | 372.97 | 600 / 8,700 |

One side self-sealing (EA). Both sides self-sealing (BA). The pressure values are applicable at a temperature of 20°C. Please inquire about other temperature ranges.

The maximum permissible operating pressures specified here (p max. permissible static) for the quick coupling systems apply exclusively to the materials stated by us and operation with Group II media according to Directive 2014/68/EU. The use of optional materials, other media (especially media from Group I) or other temperature ranges can lead to deviating maximum permissible operating pressures and must be requested separately at your supplier or directly at WALTHER-PRÄZISION.

Please note that both the maximum permissible operating pressure of the quick coupling system and the maximum permissible operating pressure of the connection must be considered in determining the plant operating pressure. Our safety instructions must be followed. You can find the safety instructions on page 22 of this catalogue.

If you have additional questions or need further information, please consult either your supplier or WALTHER-PRÄZISION directly.

◂◂◂ To view the performance diagram please click here.

To view the connection description ▸▸▸ please click here.

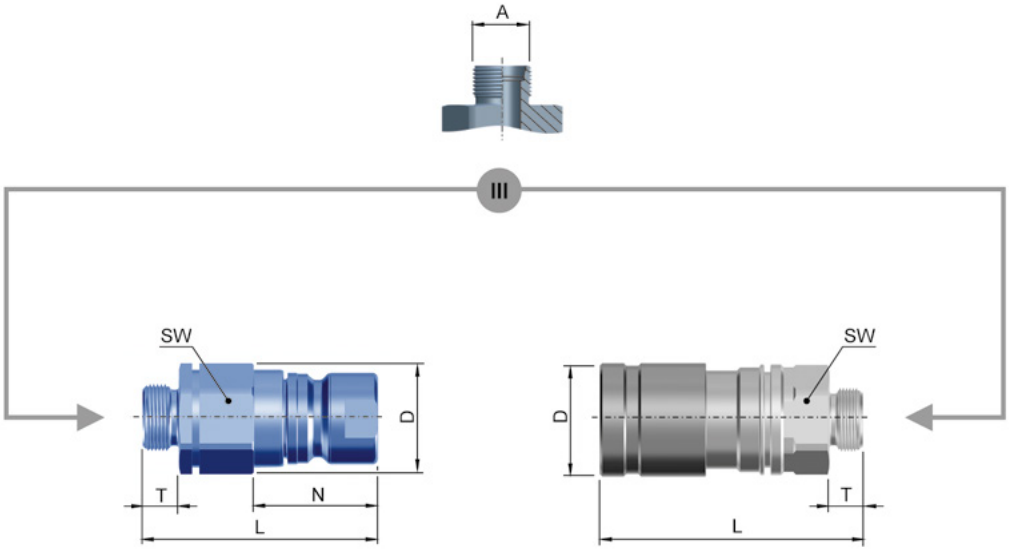


Self-sealing adaptor (male)

Self-sealing coupling (female)

## Product design features

**Intended use:** Robust high pressure clean break quick coupling system in flat-face design for the transmission of fluid media in an industrial / commercial environment.

| Properties | WEDISO | Additional options |
|---|---|---|
| - Low leakage volume during disconnection<br>- Automatic locking (One-hand operation)<br>- Non-Squirting<br>- Minimal air inclusion when connecting<br>- Full operating pressure even while disconnected<br>- Flat surfaces for easy cleaning | **Material**<br>Zinc-plated steel, yellow chromated steel, stainless steel<br>Locking sleeve: phosphated black = WEDISO ➔ all self-sealing couplings AABA, all self-sealing adaptors AABB<br><br>**Special seals suitable for**<br>pressurized liquids on mineral oil basis, HFA- and HFB-liquids<br><br>**Optional**<br>Complete stainless-steel version<br>(p max. permissible, static: 325 bar) | Z10 = Base version<br>Z11 = Pressure relief valve<br><br>**Additional options for harsh environments:**<br>Z12 = Additional dirt protection<br>Z13 = Z11 + Z12<br>Z15 = Z13 + additional dirt sleeve |

**Order number configuration**

**HC-G06-0-S1018-WEDISO-Additional options-Y../-Z..**

## Product chart

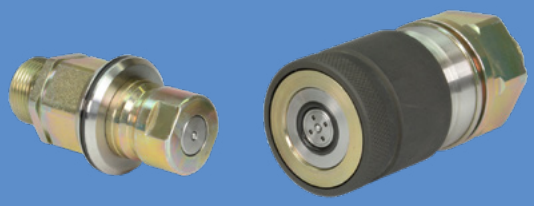

| NB | Product type | A | De-sign | Ran-ge | Pipe AD | Pipe ID | SW | T | D | L | N | Weight Steel | Material-neutral part number |
|---|---|---|---|---|---|---|---|---|---|---|---|---|---|
| 6 | Self-sealing coupling (female) | M 18 x 1.5 | III | S | 10 | 6 | 27 | 12 | 34 | 98.8 | | 455 | HC-G06-0-S1018-….-Z10 |
| 6 | Self-sealing adaptor (male) | M 18 x 1.5 | III | S | 10 | 6 | 27 | 12 | 30.1 | 69 | 23.4 | 177 | HC-G06-2-S1018-….-Z10 |
| | | | | | | | | | | | | | |
| 8 | Self-sealing coupling (female) | M 20 x 1.5 | III | S | 12 | 8 | 32 | 12 | 42.4 | 104.8 | | 660 | HC-G08-0-S1220-….-Z10 |
| 8 | Self-sealing adaptor (male) | M 20 x 1.5 | III | S | 12 | 8 | 27 | 12 | 30.1 | 69.2 | 26.8 | 220 | HC-G08-2-S1220-….-Z10 |

**NB** - Nominal bore [mm] **A** - Connection **SW** - Wrench size [mm] **T** - Thread length [mm] **D** - Diameter [mm] **L** - Length [mm] **N** - Adaptor length [mm] Weight [g]

# Series HC

## Product chart

| NB | Product type | A | De-sign | Ran-ge | Pipe AD | Pipe ID | SW | T | D | L | N | Weight Steel | Material-neutral part number |
|---|---|---|---|---|---|---|---|---|---|---|---|---|---|
| 12 | Self-sealing coupling (female) | M 24 x 1.5 | III | S | 16 | 12 | 41 | 14 | 47.2 | 102.6 | | 818 | HC-G12-0-S1624-….-Z10 |
| 12 | Self-sealing adaptor (male) | M 24 x 1.5 | III | S | 16 | 12 | 30 | 14 | 33.5 | 74.2 | 28.5 | 251 | HC-G12-2-S1624-….-Z10 |
| | | | | | | | | | | | | | |
| 16 | Self-sealing coupling (female) | M 30 x 2 | III | S | 20 | 16 | 50 | 16 | 57.8 | 112.4 | | 1,406 | HC-G16-0-S2030-….-Z10 |
| 16 | Self-sealing adaptor (male) | M 30 x 2 | III | S | 20 | 16 | 41 | 16 | 45.6 | 80.4 | 31 | 487 | HC-G16-2-S2030-….-Z10 |
| | | | | | | | | | | | | | |
| 20 | Self-sealing coupling (female) | M 36 x 2 | III | S | 25 | 20 | 50 | 18 | 63.2 | 145.6 | | 2,005 | HC-G20-0-S2536-….-Z10 |
| 20 | Self-sealing adaptor (male) | M 36 x 2 | III | S | 25 | 20 | 46 | 18 | 51.2 | 111.5 | 36 | 909 | HC-G20-2-S2536-….-Z10 |

**NB** - Nominal bore [mm] **A** - Connection **SW** - Wrench size [mm] **T** - Thread length [mm] **D** - Diameter [mm] **L** - Length [mm] **N** - Adaptor length [mm] Weight [g]